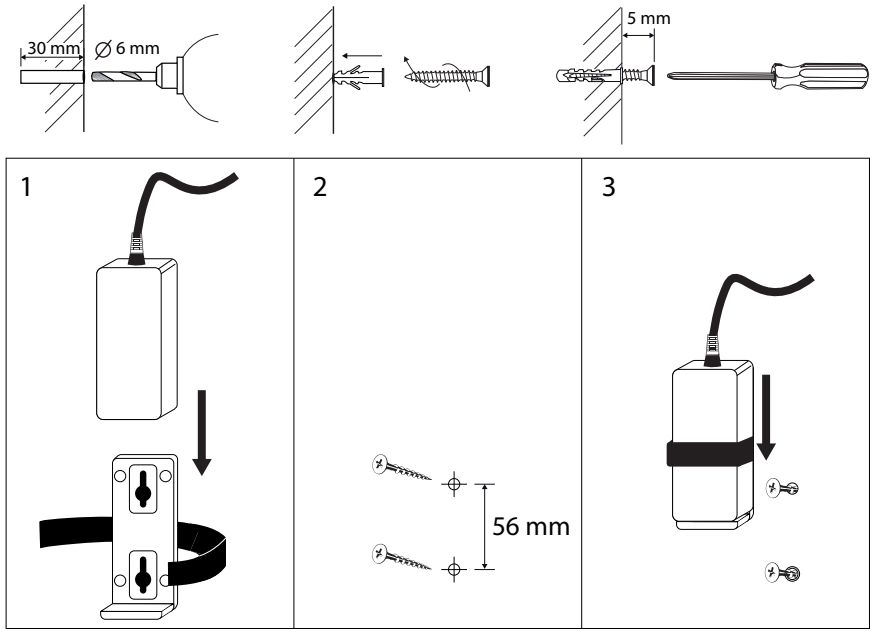
30 mm
∅ 6 mm
5 mm
1
2
56 mm
3

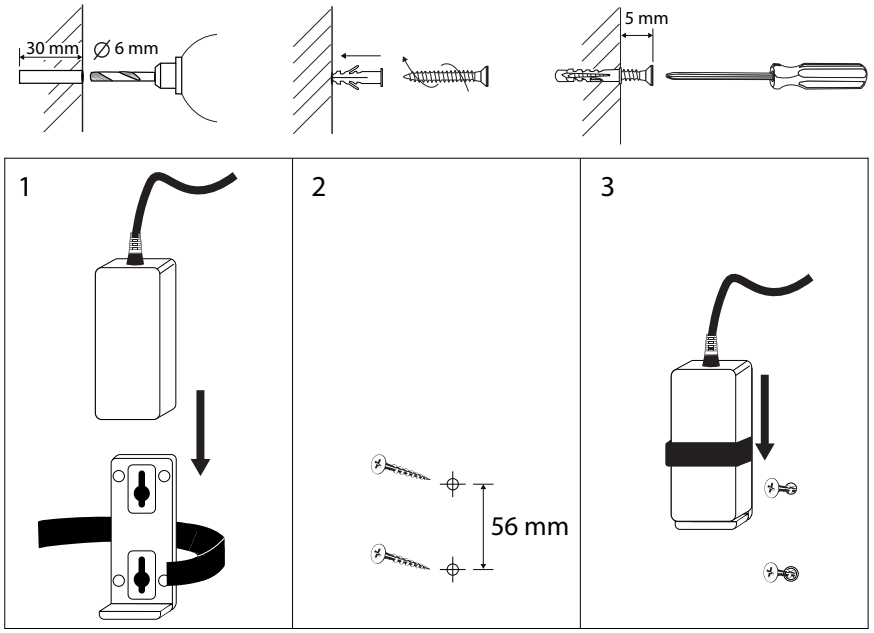
30 mm
∅ 6 mm
5 mm
1
2
56 mm
3

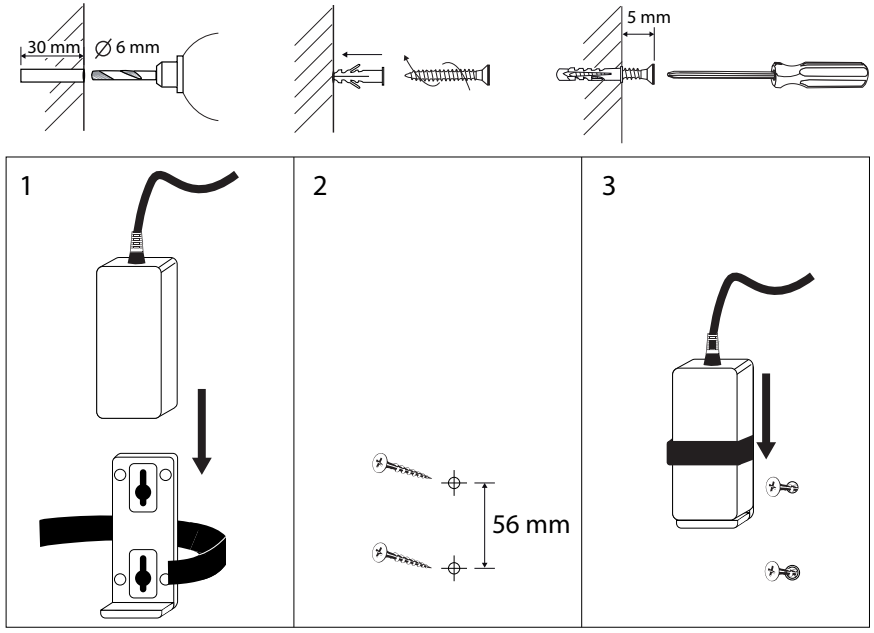
30 mm
∅ 6 mm
5 mm
1
2
56 mm
3

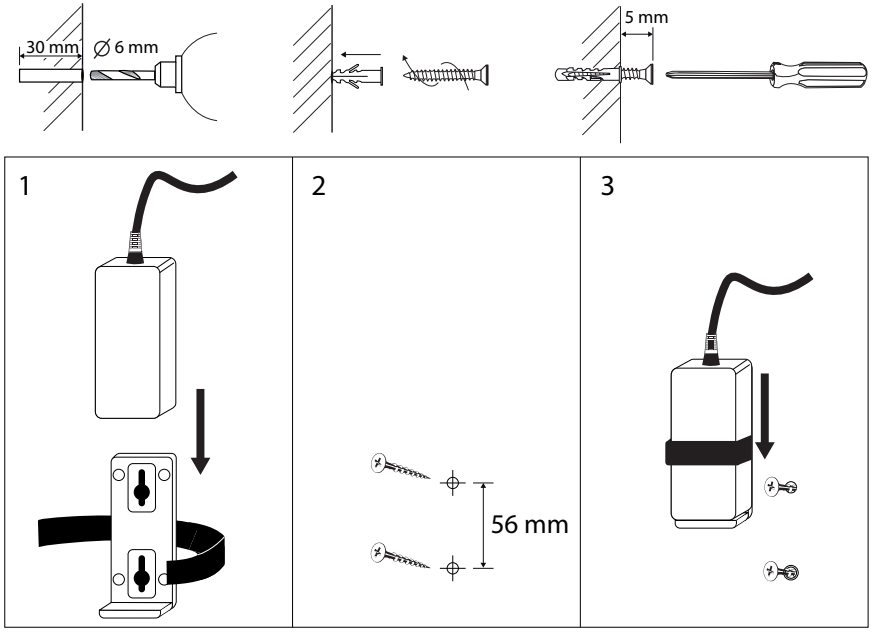
30 mm
∅ 6 mm
5 mm
1
2
56 mm
3